SECTION VI

PARTS LIST

F27Qt Serial No. 2528 ~ & up

F27Qt HYDRARAM PARTS BREAKDOWN

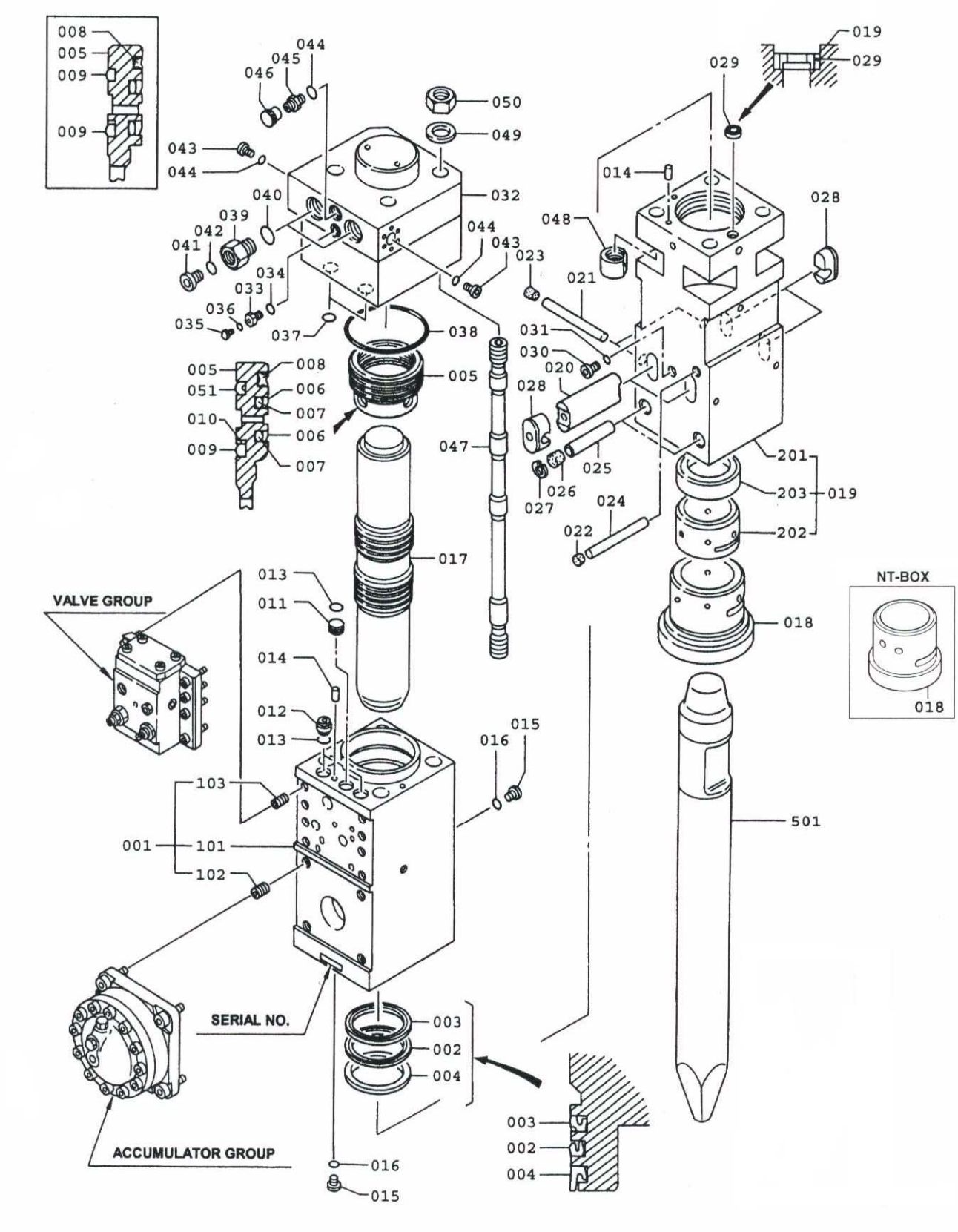

F27Qt HYDRARAM PARTS LIST

ITEM	PART NUMBER	QTY	DESCRIPTION
001	KF27-10101	1	Cylinder
102	KHB15G-10104	(4)	Heli-Sert Insert
103	KHB20G-10105	(8)	Heli-Sert Insert
002	KF27-10107	1	U-Packing [/SA]
003	KF27-10108	1	Buffer Ring [/SA]
004	KF27-10110	1	Dust Seal [/SA]
005	KF27-10111	1	Seal Retainer
006	KF27-10112	2	Slide Packing [/SA]
007	KF27-10113	(2)	O-Ring [/SA]
008	KF27-10214	1	Seal Ring [/SA]
009	KF27-10116	1	D Ring [/SA]
010	K262032-00170	1	Backup Ring [/SA]
011	KHB30G-10120	1	Plug [/SA]
012	KHB30G-10121	2	Bushing [/SA]
013	K160011-00032	3	O-Ring [/SA]
014	KF22-10125	2	Knock Pin
015	K084891-02000	2	GPF Plug
016	K160011-00011	2	O-Ring [/SA]
017	KF27-11101	1	Piston
018	KF27-20101	1	Front Cover
018	KF27-20501	1	Front Cvoer (NTBox)
019	KF27-20302	1	Fronthead
201	KF27-20203	(1)	Fronthead, Bare
202	KF27-20904	(1)	Thrust Bushing
203	KF27-20105	(1)	Thrust Ring
020	KF27-20106	2	Rod Pin (Retainer)
021	KF27-20207	2	Stop Pin, F27R
022	KHB20G-20108	1	Rubber Plug [/SB]
023	KHB20G-20108	2	Rubber Plug [/SB]Φ
024	KF27-20207	1	Stop Pin, F27T
025	KF35-20110	2	Fronthead Pin
026	K001300-20107	2	Rubber Plug [/SB]
027	K264020-00030	2	Snap Ring [/SB]
028	KF27-20112	-	Dust Plug [/SB] Θ
029	KF22-20121	1	Check Valve [/SB]
030	K084891-06000	1	GPF Plug Φ
031	K160011-00024	1	O-Ring [/SB] Φ
032	KF27-30201	1	Backhead
033	KHB15G-30103	1	Charging Valve
034	K160011-00018	1	O-Ring [/SB]
035	KHB20G-30109	1	Plug
036	K160011-00006	1	O-Ring [/SB]
037	K160011-00032	2	O-Ring [/SB]
038	K160021-00205	1	O-Ring [/SA]
	For FRONT Mounted Hoses use:		
039	KF19007	2	Port Adapter ¤
040	(Included)	(2)	O-Ring ¤
043	K084891-06000	2	GPF Plug ¤
044	K160011-00024	3	O-Ring [/SB] ¤
	For SIDE Mounted Hoses use:		
039	KF22-30111	2	Connector ¤
040	K160011-00038	2	O-Ring [/SB] ¤
041	K084891-10000	2	GPF Plug ¤
042	K160011-00029	2	O-Ring [/SB] ¤
045	K084869-06000	1	Filter Connection
046	KF22-30113	1	Air Inlet Cap
047	KF27-36101	4	Through Bolt
048	KHB30G-36202	4	Lower Nut
049	KHB30G-36207	4	Washer
050	KHB30G-36206	4	Hexagon Nut
051	KF27-10216	1	Delta Ring [/SA]
501	KF27-25321	-	Blunt Tip
501	KF27-25323	-	Moil Point
501	KF27-25324	-	Chisel Bit
-	KBM27-90001	1	Service Tool Kit

¤ Note: See *Section VI – Page # 14* in this section for Hose Configurations
Θ Dust Plugs are not used in the QT Box Hammer version
( ) Bracketed quantities indicate items included with the prior assembly.
[/SA] Items marked Option /SA are included in the Cylinder Group Seal Kit KF27-92021
[/SB] Items marked Option /SB are included in the Front-Backhead Group Seal Kit KF27-92032
[/SC] Items marked Option /SC are included in the Valve-Accumulator Group Seal Kit KF27-92023

CONTROL VALVE DETAIL
F27Qt HYDRARAM

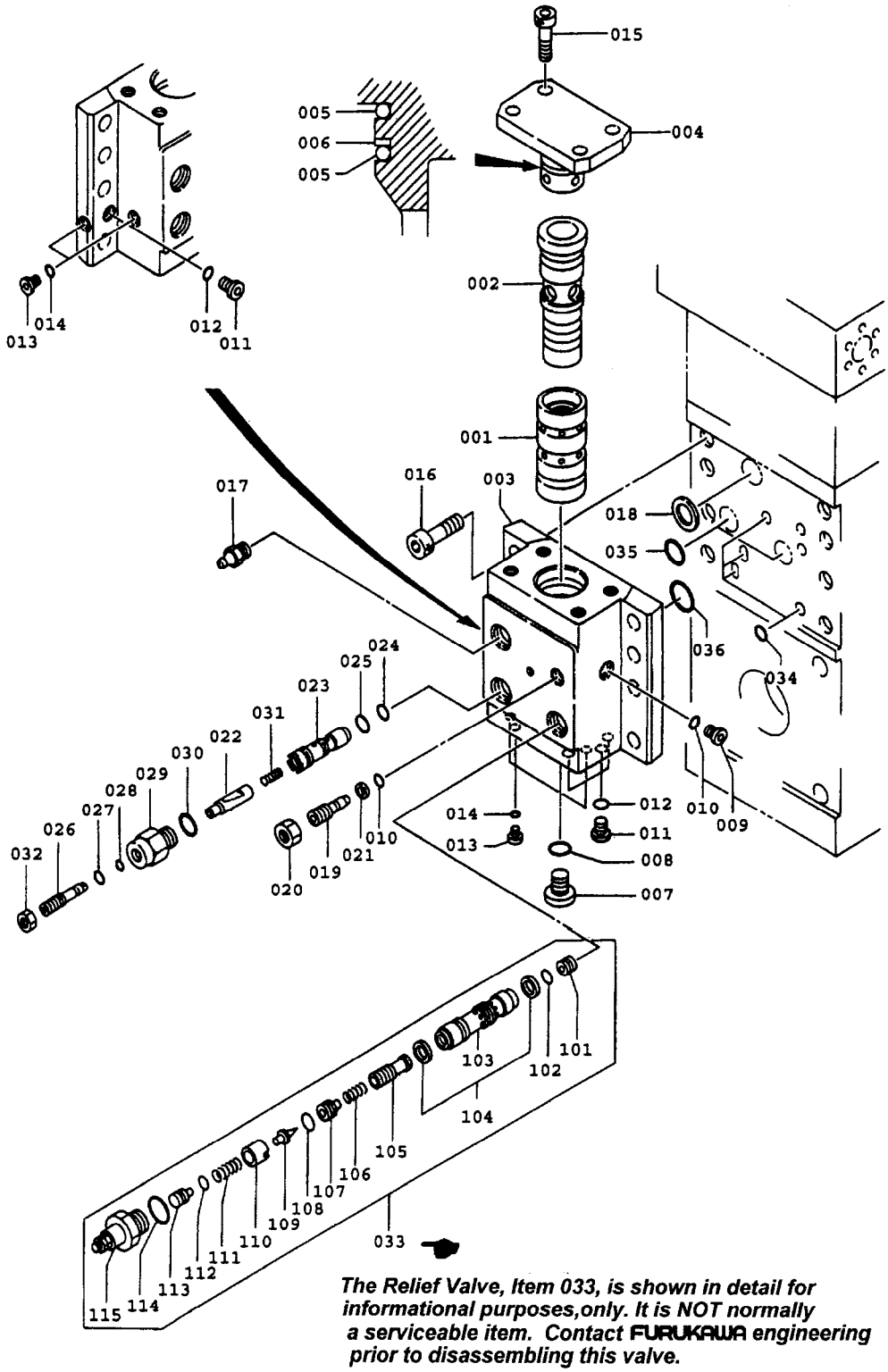

The Relief Valve, Item 033, is shown in detail for informational purposes,only. It is NOT normally a serviceable item. Contact FURUKAWA engineering prior to disassembling this valve.

CONTROL VALVE DETAIL
F27Qt HYDRARAM

ITEM	PART NUMBER	QTY	DESCRIPTION	ITEM	PART NUMBER	QTY	DESCRIPTION
001	KF35-13201	1	Valve	027	K262021-00009	1	Backup Ring [/SC]
002	KF35-13102	1	Valve Plug	028	K160011-00009	1	O-Ring [/SC]
003	KF35-13203	1	Valve Housing	029	KF22-13123	1	Stroke Plug
004	KF35-13104	1	Housing Cover	030	K161011-00024	(1)	O-Ring [/SD]
005	K161025-00065	2	O-Ring [/SC]	031	KF22-13124	1	Spring
006	K262032-00065	1	Backup Ring [/SC]	032	K120133-16000	1	Nut, Fine Thread
007	K084891-10000	1	GPF Plug	033	KF22-13330	1	Safety Valve
008	K160011-00029	1	O-Ring [/SC]	101	-	(1)	Stopper
009	K084891-03000	1	GPF Plug	102	K161011-10010	(1)	O-Ring [/SD]
010	K160011-00014	2	O-Ring [/SC]	103	-	(1)	Spool
011	K084891-02000	4	GPF Plug	104	KF22-13332	(2)	Glide Ring [/SD]
012	K160011-00011	4	O-Ring [/SC]	105	-	(1)	Sleeve
013	K084891-01000	5	GPF Plug	106	-	(1)	Spring [/SE]
014	K160011-00008	5	O-Ring [/SC]	107	-	(1)	Retainer
015	K102033-20050	4	Fine Thread Bolt	108	K161011-00012	(1)	O-Ring [/SD] [/SE]
016	K102032-20055	8	Socket Bolt	109	-	(1)	Needle Valve [/SE]
017	K001100-20123	1	Grease Nipple	110	-	(1)	Valve Guide
018	KHB30G-13208	1	Face Seal [/SC]	111	-	(1)	Spring [/SE]
019	KHB30G-13110	1	Valve Adjuster	112	K161011-00008	(1)	O-Ring [/SD]
020	K120133-22000	1	Fine Thread Nut	113	-	(1)	Push Rod
021	K262021-00014	1	Backup Ring [/SC]	114	K161011-00024	(1)	O-Ring [/SD]
022	KF35-13320	1	Stroke Valve	115	-	(1)	Retainer
023	KF22-13121	1	Stroke Bushing	034	K161025-00025	4	O-Ring [/SC]
024	KF22-13521	1	O-Ring [/SC]	035	K161025-00045	2	O-Ring [/SC]
025	KF22-13522	1	O-Ring [/SC]	036	K161025-00050	1	O-Ring [/SC]
026	KF22-13122	1	Stroke Adjuster				

( ) Bracketed quantities indicate items included with the prior assembly.
[/SC] Items marked Option /SC are included in the Valve-Accumulator Group Seal Kit KF27-92023
[/SD] Items marked Option /SD are included in the KF22-92025 Safety Valve Seal Kit
[/SE] Items marked Option /SE are included in the KF22-13331 Needle Valve Kit

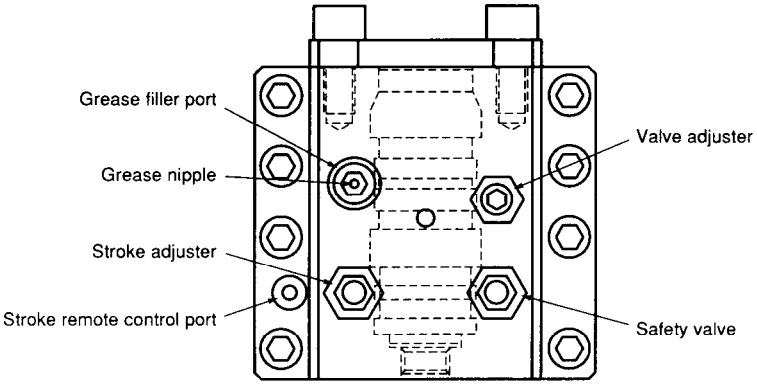

KHB20G-70006
ACCUMULATOR ASSEMBLY
F27Qt HYDRARAM

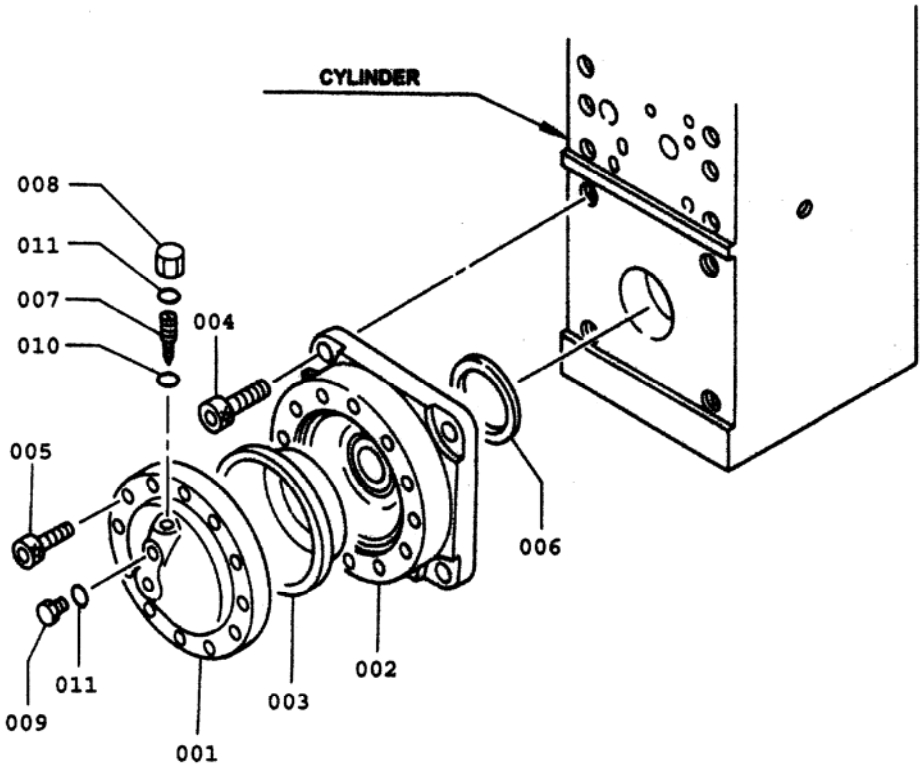

ITEM	PART NUMBER	QTY	DESCRIPTION	ITEM	PART NUMBER	QTY	DESCRIPTION
001	KHB20G-70601	1	Accumulator Cover	007	K007120-70134	1	Valve
002	KHB20G-70602	1	Accumulator Body	008	K007010-70029	1	Cap
003	KHB20G-70611	1	Diaphragm	009	K007010-70030	1	Plug
004	K102032-24065	4	Socket Bolt	010	K160011-00005	1	O-Ring [/SC]
005	K102033-18040	12	Socket Bolt	011	K160011-00014	2	O-Ring [/SC]
006	KHB20G-70219	1	Face Seal [/SC]				

[/SC] Items marked Option /SC are included in the Accumulator Group Seal Kit KF22-92023

Notes

KF27-92021 SEAL KIT
CYLINDER GROUP (A)

Line items refer to the drawing in section VI on page 2

Item	Part Number	Qty	Description	Item	Part Number	Qty	Description
002	KF27-10107	1	U-Packing	010	K262032-00170	1	Backup Ring
003	KF27-10108	1	Buffer Ring	011	KHB30G-10120	1	Plug
004	KF27-10110	1	Dust Seal	012	KHB30G-10121	2	Bushing
006	KF27-10112	2	Slide Packing	013	K160011-00032	3	O-Ring
007	KF27-10113	[2]	O-Ring	016	K160011-00011	2	O-Ring
008	KF27-10214	1	Seal Ring	038	K160021-00205	2	O-Ring
009	KF27-10116	2	D Ring	051	KF27-10216	1	Delta Ring

KF27-92032 SEAL KIT
FRONTHEAD & BACKHEAD GROUP (B)

Line items refer to the drawing in section VI on page 2

Item	Part Number	Qty	Description	Item	Part Number	Qty	Description
022	KHB20G-20108	1	Rubber Plug	034	K160011-00018	1	O-Ring
023	KF22-20208	2	Rubber Plug	036	K160011-00006	1	O-Ring
026	K001300-20107	2	Rubber Plug	037	K160011-00032	2	O-Ring
027	K264020-00030	2	Snap Ring	040	K160011-00038	2	O-Ring
028	KF27-20112	4	Dust Plug	042	K160011-00029	2	O-Ring
029	KF22-20121	1	Check Valve	044	K160011-00024	3	O-Ring
031	K160011-00024	1	O-Ring				

KF27-92023 SEAL KIT
VALVE & ACCUMULATOR GROUP ©

Line items refer to the drawing in section VI on page 4

Item	Part Number	Qty	Description	Item	Part Number	Qty	Description
005	K161025-00065	2	O-Ring	024	KF22-13521	1	O-Ring
006	K262032-00065	1	Backup Ring	025	KF22-13522	1	O-Ring
008	K160011-00029	1	O-Ring	027	K262021-00009	1	Backup Ring
010	K160011-00014	1	O-Ring	028	K160011-00009	1	O-Ring
011	K160011-00011	4	O-Ring	030	K160011-00024	1	O-Ring
014	K160011-00008	5	O-Ring	034	K161025-00025	4	O-Ring
018	KHB30G-13208	1	Face Seal	035	K161025-00045	2	O-Ring
021	K262021-00014	1	Backup Ring	036	K161025-00050	1	O-Ring

Line items refer to the drawing in section VI on page 6

006	KHB20G-70219	1	Face Seal	011	K160011-00014	2	O-Ring
010	K160011-00005	1	O-Ring				

KF22-13011 REMOTE STROKE CONTROL OPTION KIT

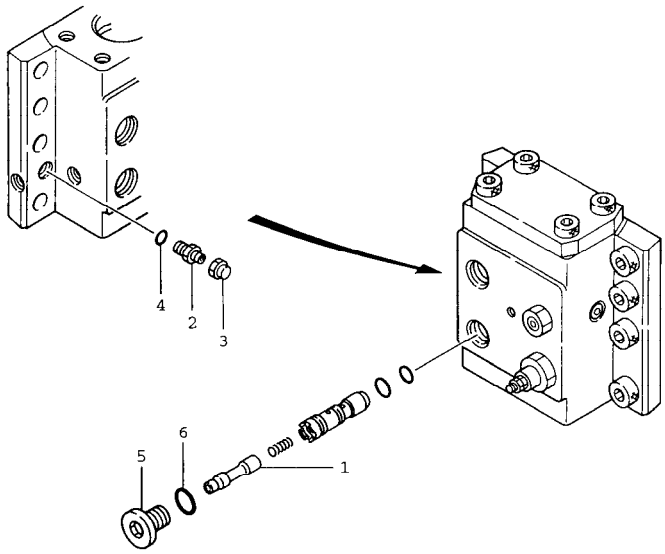

ITEM	PART NUMBER	QTY	DESCRIPTION	ITEM	PART NUMBER	QTY	DESCRIPTION
1	KF22-13220	1	Stroke Valve	4	K160011-00011	1	O-Ring
2	K084861-02000	1	Male Connector	5	K084891-06000	1	GPF Plug
3	K084891-02000	1	Union Cap	6	K160011-00024	1	O-Ring

KF22-13013 REMOTE LUBRICATION (AUTO-LUBE) OPTION KIT

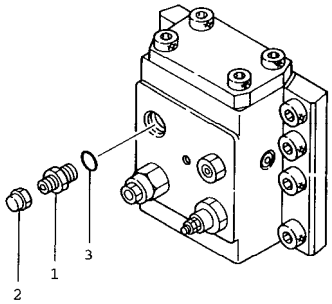

ITEM	PART NUMBER	QTY	DESCRIPTION	ITEM	PART NUMBER	QTY	DESCRIPTION
1	K15525	1	Male Connector	3	(Included w/ #1)	1	O-Ring
2	K15034	1	Union Cap	Use:	K19602	1	Lubricator System

⇨ Contact Furukawa Rock Drill USA's Product Support Department for additional information and specific recommendations.

KF27-88002 T-BOX MOUNTING
F27Qt HYDRARAM

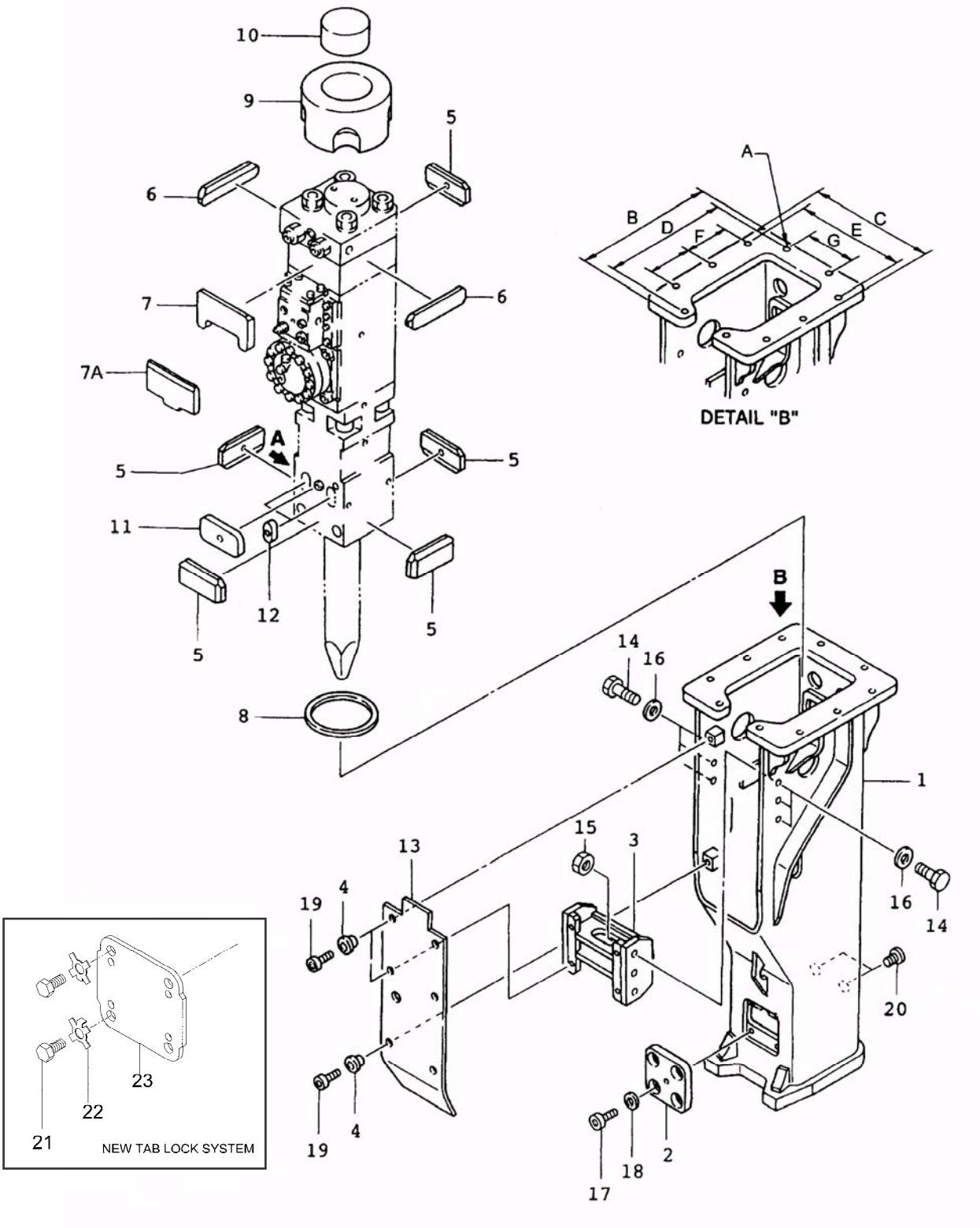

KF27-88002
T-BOX MOUNTING PARTS
F27Qt HYDRARAM

ITEM	PART NUMBER	QTY	DESCRIPTION	ITEM	PART NUMBER	QTY	DESCRIPTION
1	KF27-88101	1	T-Box Weldment	13	KF27-88329	1	Soundproof Cover
2	KF27-88412	1	Pin Cover *	14	K101032-30070	6	Hex Head Bolt
3	KF27-88213	1	Spacer	15	K120132-30000	6	Hex Nut
4	KF35-88114	6	Collar	16	K140112-30000	6	Washer
5	KF22-88121	5	Front Damper	17	K102032-20035	4	Socket Bolt *
6	KF22-88323	2	Back Damper (A)	18	K140112-20000	4	Washer *
7	KF27-88224	1	Back Damper (B)	19	K102032-16025	6	Socket Bolt
7A	KF27-88224A	1	Back Damper (B)				
8	KF27-88125	1	Dust Ring	20	K084891-06000	2	GPF Plug
9	KF27-88326	1	Top Damper	21	K19875	4	Cap Screw, M20 *
10	KF27-88127	1	Top Stoper	22	KF22007	4	Tab Lock Washer *
11	KF27-88428	1	Pin Damper	23	KF27100	1	Pin Cover *
12	F27-88130	2	Pin Plug	**	KF2788232	1	Top Spacer

- Use either items 2, 17, and 18, or items 21, 22, and 23.
  The tab washer system replaces the socket bolt version.

** Items Not Shown

NOTE:

The Stop Pin, Dust Plugs, and Rubber Plug indicated at Detail A on the T-Box Parts Breakdown are NOT used when the hammer is mounted in the T-Box Case. Remove the stop pin, rubber plug, and dust plugs from fronthead of hammer before assembling T-Box Case.

	Inch	Milimeter	
A	1.260	32	Bolt Hole Diameter
B	26.575	675	Flange, Long Side
C	23.622	600	Flange, Short Side
D	23.228	590	Center to Center
E	20.669	525	Center to Center
F	8.268	210	Center to Center
G	9.843	250	Center to Center

⇨ Furukawa Rock Drill USA offers a variety of top caps that match the original equipment for many excavator makes and models and work with many coupler systems. Please contact Furukawa Rock Drill USA's Product Support Department for additional information.

KF27-88005 NT-BOX MOUNTING
F27Qt HYDRARAM
S/N 2528~

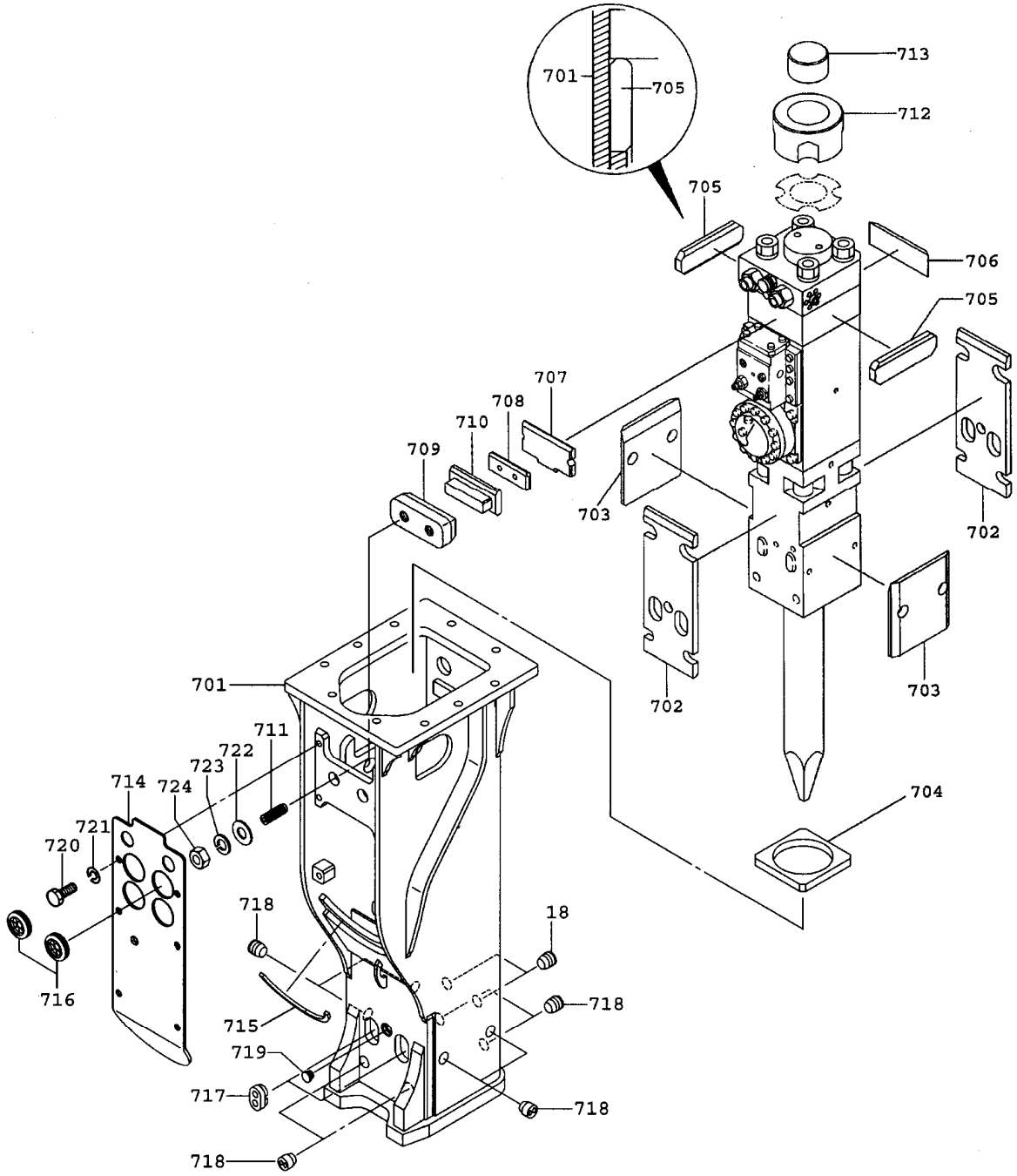

KF27-88005
NT-BOX MOUNTING PARTS
F27Qt HYDRARAM

ITEM	PART NUMBER	QTY	DESCRIPTION	ITEM	PART NUMBER	QTY	DESCRIPTION
701	KF27-88501	1	T-Box Weldment	713	KF27-83213	1	Top Stopper
702	KF27-83202	2	Front Damper	714	KF27-88502	1	Soundproof Cover
703	KF27-83203	2	Side Damper	715	KF27-88504	1	Cushion
704	KF27-83204	1	Dust Protector	716	KF22-88505	2	Grommet
705	KF27-83205	2	Back Damper (A)	717	KF22-83218	2	Pin Plug
706	KF27-83206	1	Back Damper (B)	718	KF22-83222	10	Dust Plug
707	KF27-83207	1	Back Damper (C)	719	KF22-83220	1	Grease Cap
708	KF22-83208	1	Back Spacer	720	K10103220040	6	Bolt
709	KF22-83209	1	Spacer (A)	721	K14501220000	6	Spring Washer
710	KF22-83210	1	Spacer (B)	722	K14011242000	2	Washer (H)
711	KF22-83211	2	Damper Adjuster	723	K14501242000	2	Spring Washer
712	KF27-83212	1	Top Damper	724	K12213342000	2	Nut

HOSE CONFIGURATIONS
F27Qt HYDRARAM

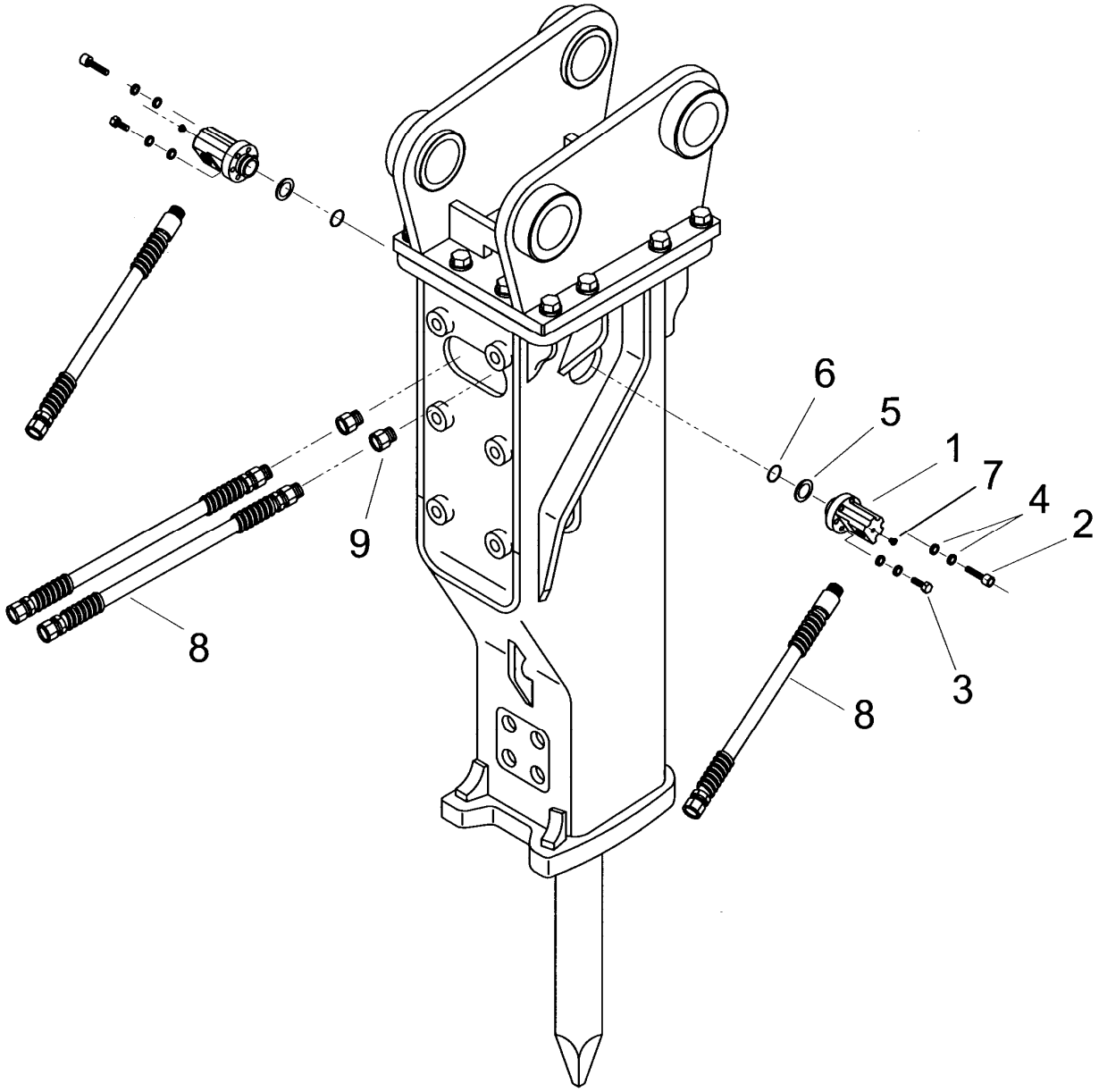

HOSE CONFIGURATIONS
F27Qt HYDRARAM

The F27Qt Hammer can be equippied with either FRONT or SIDE mounted hose whips. Hammers will be shipped with FRONT hoses unless SIDE hoses are specified.

SIDE MOUNTED HOSES

(2) KBM12381A Hose Assemblies consist of the following:

ITEM	PART NUMBER	QTY	DESCRIPTION
1	K19880-D	2	Port Adapter
2	K19886	8	12mm Socket Head Bolt
3	K19884	4	12mm Hex Head Bolt
4	K19840	12	Locking Washers (Interlocking Set of 2)
5	K10948	2	Backup Ring
6	K10940	2	O-Ring
7	K19296	2	#4 Hollow Hex Plug
8	K12381	2	Hose Whip

⇨ The following parts are used when the SIDE mounted hoses are installed:

--	KF22-30111	2	Front Port Adapter *(Not Shown)*
--	K160011-00038	2	O-Ring for Port Adapter *(Not Shown)*
--	K084891-10000	2	Plug for Front Hose Ports *(Not Shown)*
--	K160011-00029	2	O-Ring for Adapter Plug *(Not Shown)*

FRONT MOUNTED HOSES:

ITEM	PART NUMBER	QTY	DESCRIPTION
8	K12381	2	Hose Whip
9	KF19007	2	Front Port Adapter with O-Ring

⇨ The following parts are used when the FRONT mounted hoses are installed:

--	K084891-06000	2	Plug for Side Hose Ports *(Not Shown)*
--	K160011-00024	2	O-Ring for Side Hose Ports *(Not Shown)*

UNIVERSAL TOP CAP
F27Qt HYDRARAM

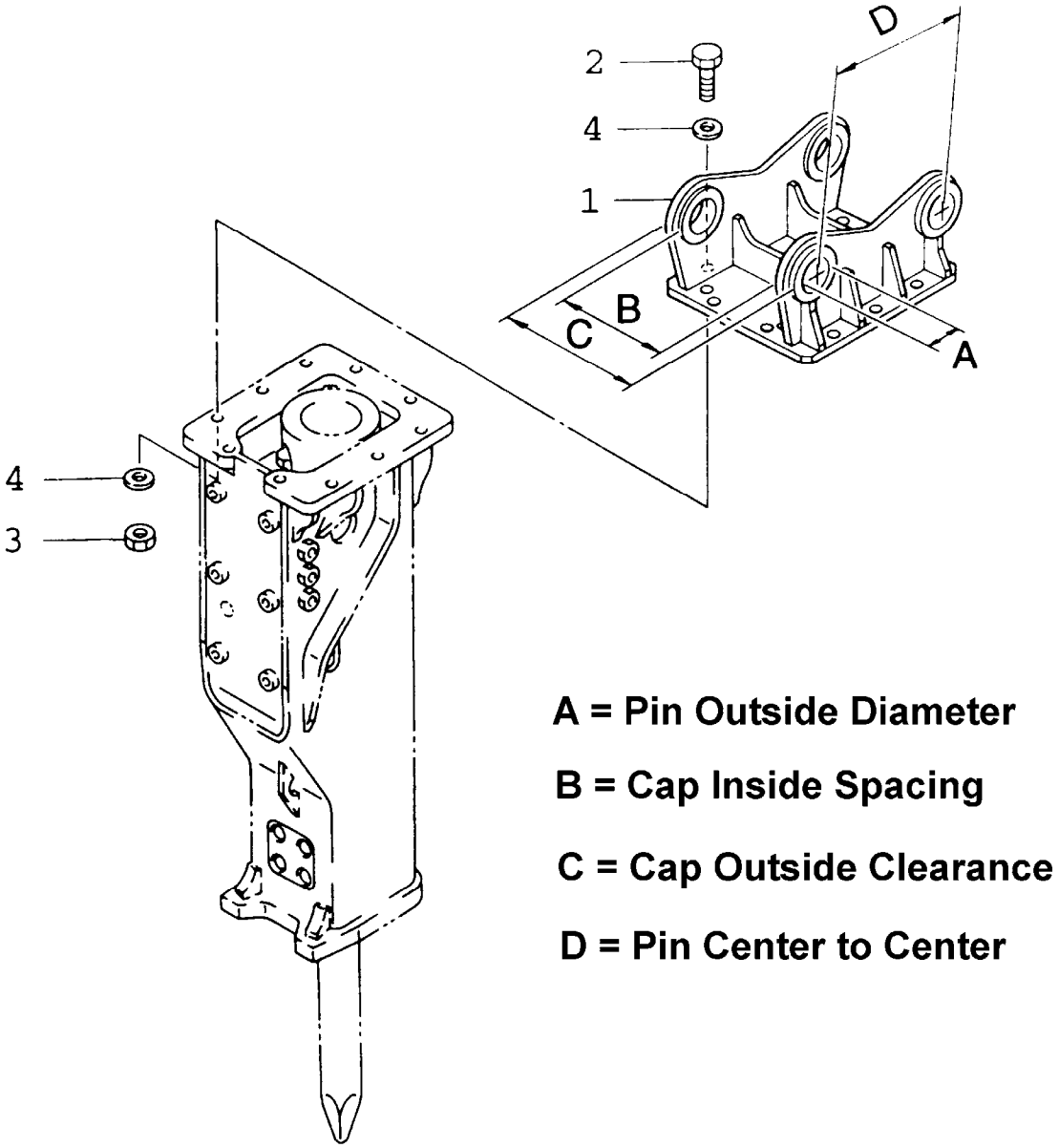

ITEM	PART NUMBER	QTY	DESCRIPTION	ITEM	PART NUMBER	QTY	DESCRIPTION
1	KF35050	1	Universal Cap	4	KF35013	20	Hardened Washer
2	KF35011	10	Cap Screw	*	K12381	2	Whip Hose
3	KF35012	10	Heavy Hex Nut				* Not Shown

⇨ Furukawa Rock Drill USA offers a variety of top caps that match the original equipment for many excavator makes and models and work with many coupler systems. Please contact Furukawa Rock Drill USA's Product Support Department for additional information.

MOUNTING PIN KIT
FOR UNIVERSAL TOP CAP
KF35050
F27QT HYDRARAM

Base Machine Make: _____

Base Machine Model: _____

Dipperstick Pin Diameter: _____

Link Pin Diameter: _____

Dipperstick Width: _____

Link Pin Width: _____

MOUNTING KIT PART NO: _____

Consisting of the following:

ITEM	P/N	QTY.	DESCRIPTION
1	_____	1	_____ DIA. MOUNTING PIN x 26” LONG
2	_____	1	_____ DIA. MOUNTING PIN x 26” LONG
3	K12125	2	_____ DIA. MOUNTING BUSHING X _____ LG.
4	K12125	2	_____ DIA. MOUNTING BUSHING X _____ LG.
5	K10193	2	3/4" -10 UNC BOLT
6	K10195	2	3/4" -10 UNC LOCKNUT

SERVICE TOOL KIT

P/N KBM2790001
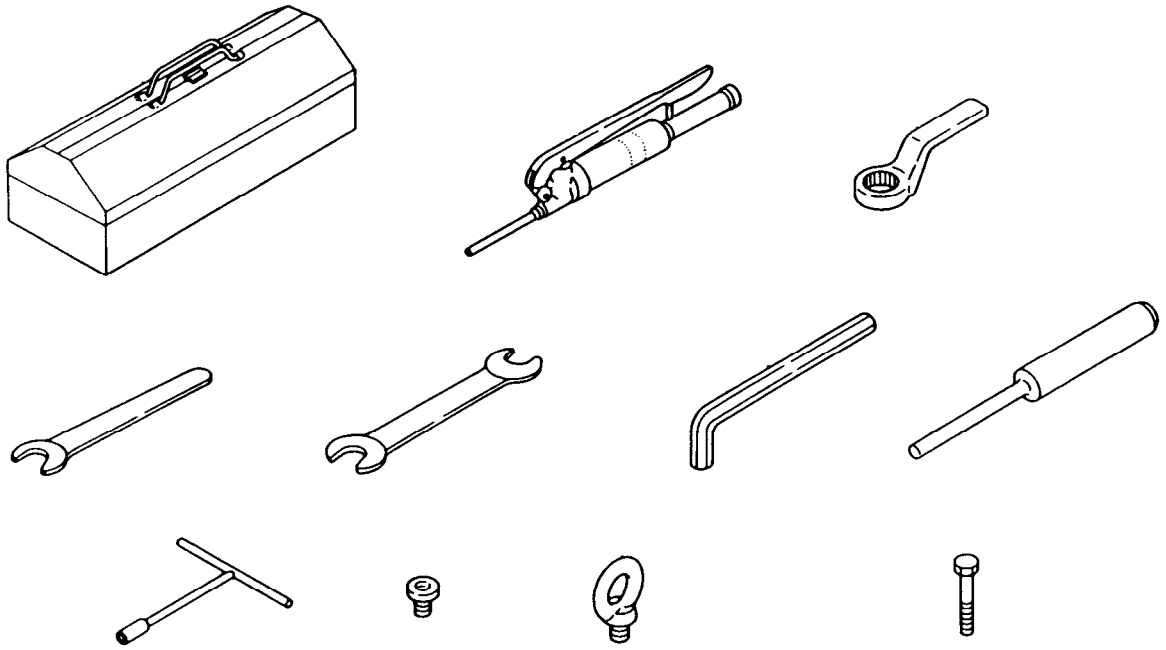
Furukawa Rock Drill USA includes a tool box with every new hydraulic breaker. This tool box contains many of the special tools and wrenches required to perform normal maintenance or repairs on the breaker. This is a basic tool box, and by no means complete or comprehensive, but does contain many specialized tools, and wrench sizes not commonly found in the field. The following illustration depicts a typical tool box and its contents: